DocuSign Envelope ID: 2B52FFD6-8701-44FC-9140-D2E9E7F7AAC4

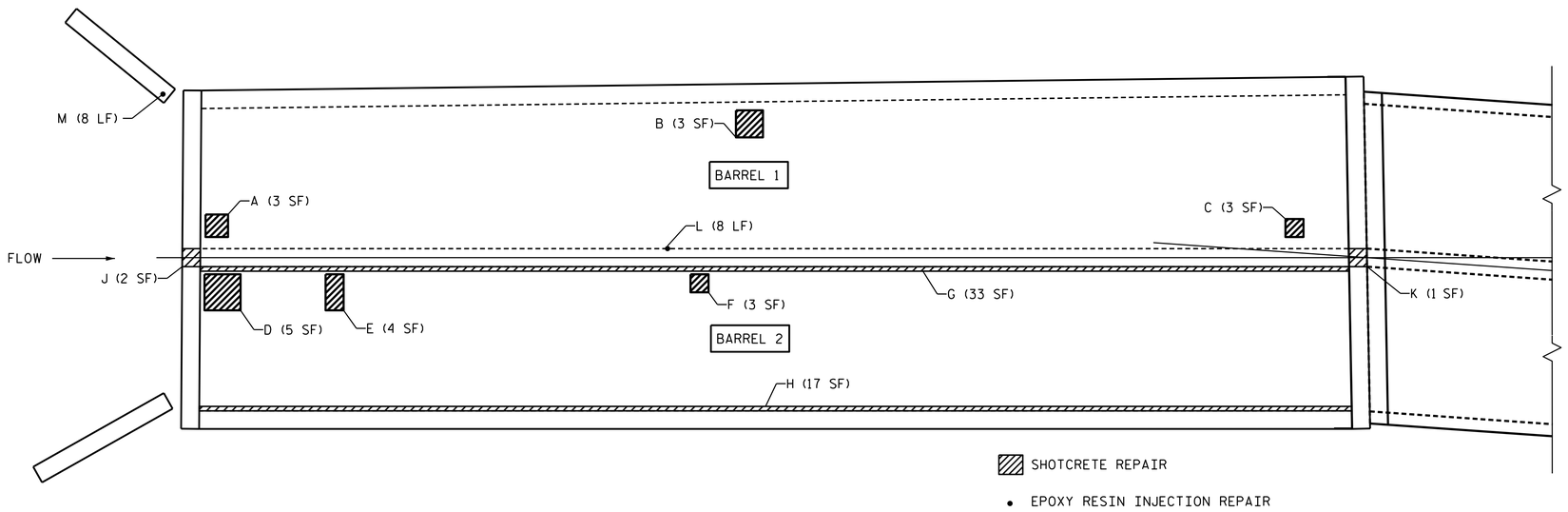

EXISTING CULVERT ESTIMATED REPAIRS

NOTES

THE CONTRACTOR SHALL REMOVE SURFACE CONCRETE TO VERIFY THAT SAWCUT DEPTH WILL NOT DAMAGE EXISTING REINFORCING STEEL.

THE CONTRACTOR SHALL SAW CUT TO A NOMINAL DEPTH OF 1/2" BUT REINFORCING STEEL SHALL NOT BE DAMAGED.

CONTRACTOR SHALL SAW CUT THE REPAIR AREAS SO THAT THE CORNERS ARE SQUARE AS INDICATED ON THE DETAILS.

CONCRETE REPAIRS MAY BE SUBSTITUTED IN LIEU OF SHOTCRETE REPAIRS WITH THE APPROVAL OF THE ENGINEER.

FOR SHOTCRETE REPAIRS, SEE SPECIAL PROVISIONS.

FOR EPOXY RESIN INJECTION, SEE SPECIAL PROVISIONS.

PROVIDED LOCATIONS ARE ESTIMATED; EXISTING INLET HEADWALL CRUMBLING AND TO BE EVAULATED IN THE FIELD. FINAL LIST OF REPAIRS TO BE DETERMINED AS PER THE ENGINEER.

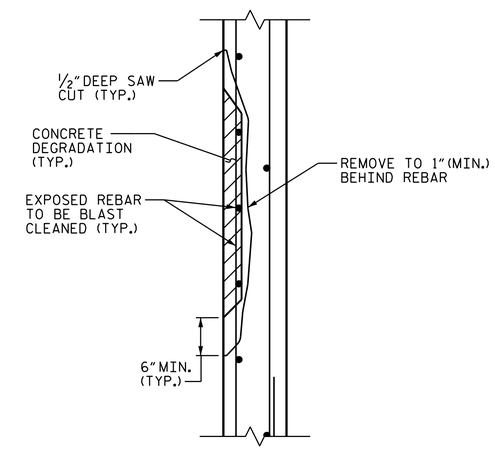

TYPICAL SHOTCRETE REPAIR

ON EXISTING SLAB OR WALLS

ESTIMATED CULVERT REPAIR QUANTITIES

SHOTCRETE REPAIRS

LABEL	BARREL	LOCATION	DISTANCE FROM INLET	EST. AREA (SF)	EST. VOLUME (CF)
A	1	TOP SLAB	0'-0"	3.00	1.50
B	1	TOP SLAB	31'-3"	3.00	1.50
C	1	TOP SLAB	61'-6"	3.00	1.50
D	2	TOP SLAB	0'-0"	4.00	2.00
E	2	TOP SLAB	8'-6"	4.00	2.00
F	2	TOP SLAB	28'-9"	3.00	1.50
G	2	BTM. INT. WALL	THROUGHOUT	33.00	2.74
H	2	BTM. EXT. WALL	THROUGHOUT	17.00	2.13
J	INLET	BTM. INT. WALL	N/A	2.00	1.17
K	OUTLET	BTM. INT. WALL	N/A	1.00	0.33
				TOTAL	17.00

EPOXY RESIN INJECTION REPAIRS

LABEL	BARREL	LOCATION	DISTANCE FROM INLET	EST. LIN. FT.
L	1	INT. WALL	26'-9"	8.00
M	1	INLET WINGWALL JT.	N/A	8.00
			TOTAL	16.00

PROJECT NO. W-5714E

JACKSON COUNTY

STATION: 18+58.00 -L-

SHEET 8 of 8

STATE OF NORTH CAROLINA
DEPARTMENT OF TRANSPORTATION
RALEIGH

DOUBLE 8'-0" X 8'-0"
CONCRETE BOX CULVERT
EXISTING BARREL
REPAIR DETAILS

REVISIONS						SHEET NO.
NO.	BY:	DATE:	NO.	BY:	DATE:	C-9
1			3			TOTAL SHEETS
2			4			09

ms consultants, inc.
5444 Wade Park Blvd.
Suite 160
Raleigh, NC 27607
NC License Number : C-3239

NORTH CAROLINA PROFESSIONAL SEAL 037903 ENGINEER JEFFREY M KEPICH

DocuSigned by: Jeffrey Kepich 4/21/2022

DOCUMENT NOT CONSIDERED FINAL UNLESS ALL SIGNATURES COMPLETED

DRAWN BY :	J.M. KEPICH	DATE :	03/21
CHECKED BY :	L.M. SAMPLES	DATE :	05/21
DESIGN ENGINEER OF RECORD :	J.M. KEPICH	DATE :	04/22

$$$$$$$$SYSTIME$$$$$
$$$$$$$$$$$$$$$$$$DGN$$$$$$$$$$$$$$$$$$$$
$$$$USERNAME$$$$